Promoting the Science of Ecology

Linear Population Models with Stochastic Time Delays
Author(s): E. R. Lewis
Source: *Ecology*, Vol. 58, No. 4 (Jul., 1977), pp. 738-749
Published by: Ecological Society of America
Stable URL: http://www.jstor.org/stable/1936210
Accessed: 20/12/2010 14:09

Your use of the JSTOR archive indicates your acceptance of JSTOR's Terms and Conditions of Use, available at http://www.jstor.org/page/info/about/policies/terms.jsp. JSTOR's Terms and Conditions of Use provides, in part, that unless you have obtained prior permission, you may not download an entire issue of a journal or multiple copies of articles, and you may use content in the JSTOR archive only for your personal, non-commercial use.

Please contact the publisher regarding any further use of this work. Publisher contact information may be obtained at http://www.jstor.org/action/showPublisher?publisherCode=esa.

Each copy of any part of a JSTOR transmission must contain the same copyright notice that appears on the screen or printed page of such transmission.

JSTOR is a not-for-profit service that helps scholars, researchers, and students discover, use, and build upon a wide range of content in a trusted digital archive. We use information technology and tools to increase productivity and facilitate new forms of scholarship. For more information about JSTOR, please contact support@jstor.org.

Ecological Society of America is collaborating with JSTOR to digitize, preserve and extend access to *Ecology*.

http://www.jstor.org

Ecology (1977) **58**: pp. 738–749

LINEAR POPULATION MODELS WITH STOCHASTIC TIME DELAYS[1]

E. R. Lewis
Department of Electrical Engineering and Computer Sciences and the Electronics Research Laboratory, University of California, Berkeley, California 94720 USA

Abstract. Previously it was shown that reproductive-cycle parameters such as time to maturity, ovulation interval, gestation period, duration of regression, duration of nonreproductive lactation period, and the like, can be incorporated into population models rather easily through the use of a simple network approach. In this paper, the network approach is extended to include the same types of reproductive parameters when their values are not necessarily fixed, but may vary randomly from one member of a population to the next and/or for a given member from one time to the next. It is shown that linear transforms of the parameter distribution functions can be incorporated directly into the network models and that analysis of the resulting dynamics follows in a straightforward manner, the characteristic dynamical equation being obtainable by inspection with Mason's algorithm and the roots of the equation being obtainable by direct analysis in simple cases or by well-established numerical methods in complicated cases. The roots themselves can be interpreted directly in terms of dominant patterns of population growth and deduced propensity of the population to sustain oscillations triggered by external stimuli. In the case of a simple natality cycle with gamma, negative binomial, and binomial distributions of maturation times, it is shown that the dominant growth pattern approximates rather closely that expected for a nonrandom maturation time equal to the mean of the distribution, and that the propensity to sustain population oscillations decreases markedly both with increasing standard deviation and with increasing (positive) skewness in the distribution.

Introduction

In a previous paper (Lewis 1976), it was shown that network modeling and analysis methods, employing Laplace and z transforms and linear flow graph techniques, can be applied to a fairly wide variety of linear population models. The chief advantage of the network modeling format is the facility with which time can be initialized at specified moments other than birth (i.e., other time classes, in addition to age classes, could be managed easily). Key elements in the network models were fixed time delays, representing key processes such as maturation, ovulation cycles, lactation, regression, and the like. Although the durations of many such processes are very close to being fixed and constant, there usually is some variability, so that to the observer, unaware of the underlying physiological, anatomical, or behavioral determinants the processes themselves appear to be somewhat stochastic in nature. A modeler may wish to include an estimate of the stochastic nature of such a process in his or her model, representing the process not as a fixed time delay but as a stochastic delay, capable of taking on any of several or many values. Indeed, this is done tacitly in a wide variety of lumped and distributed parameter models based on age classes (e.g., Feller 1941; Lewis 1942; Leslie 1945; von Foerster 1959). Two modelers have incorporated stochastic time delays explicitly. Keyfitz (1972) has examined the relationships between the distribution parameters of a random age of offspring production and the theoretical persistence of oscillations in human populations; and Kendall (1948, 1949) has examined the effects of chi-square distributed fission time on the growth of organisms undergoing binary fission.

There are two purposes of this paper. The first and more important is to demonstrate that one can capitalize on the equivalence between generating functions for continuous and discrete probability distributions and the Laplace and z transforms of those distributions to employ the network construction and analysis methods previously described (Lewis 1976), and thus deal with a very wide variety of stochastic time delays coupled to linear population dynamics. In this manner, one can extend considerations such as those of Kendall (1948) and Keyfitz (1972) to other time-delay distributions and to population models based on several initialized time classes rather than simply on age classes.

Conservative and nonconservative stochastic time delays can be represented by their respective Laplace or z transform functions, with the parameters of the hypothesized underlying probability distributions being represented explicitly. Those functions can be incorporated directly into network models; and with the aid of Mason's algorithm for signal flow graph analysis and commonly available numerical methods for root finding, one can develop characteristic equations for the models and find the roots of those equations (Mason 1956). Once found, the roots can be interpreted in terms of such aspects of population dynamics as dominant population growth patterns and

[1] Manuscript received 10 October 1975; accepted 4 February 1977.

the propensity of the population to sustain oscillations (i.e., the questions of Kendall (1949) and Keyfitz (1972), which are in fact among the major questions that one might attempt to answer with a linear population model).

The basic representations of a stochastic time delay presented here provide heuristic alternatives to the renewal equation, the Leslie matrix, and von Foerster's (1959) equation, but alternatives that are especially compatible with the network modeling format. Therefore, in using them, one retains the flexibility to initialize time at moments other than birth.

The second purpose of the paper is to present the results of a study employing the methods described herein to determine and compare the effects of three different reproductive maturation time distributions with each other and with the effects of a fixed maturation time in a simple natality cycle. It is shown that the conclusions of Keyfitz (1972) concerning a cosinusoidal distribution of maturation times in humans are applicable to general natality cycles with gamma, negative binomial, and binomial distributions of maturation times. For all of these distributions, the propensity of the system toward sustained oscillations (e.g., periodic fluctuations in the total population or in its age-class distribution) increases as the distribution of maturation times becomes either less variant or less skewed toward times greater than the mean (less skewed "to the right"). Furthermore, it is shown that the dominant exponential or geometric growth pattern is more or less independent of the maturation time distribution, but approximates that which would occur if the maturation time were fixed at its mean value (i.e., were not a random variable).

Linear Transforms of Stochastic Time Delays

Consider either in discrete time (τ) or continuous time (t) a population flow variable, J_{in}, representing the flow of individuals (individuals per unit time) into a particular process, such as maturation, gestation, or the like. Let the duration, T, of the process be a random variable whose density function (Feller 1968, p. 179) is $p(T)$, as depicted in Fig. 1a. Thus, in discrete time, $J_{in}(\tau)$ would be the number of individuals in the cohort entering the process during the τth interval (e.g., the τth day); and $p(T)$ would be the proportion of those individuals expected to complete the process T intervals later (e.g., in the $(\tau + T)$th day). The flow, $J_{out}(\tau)$, of individuals emerging from the process during the τth interval can be expressed as a simple sum of the cohorts that entered previously, each weighted by the proportion of its members expected to emerge during the τth interval. If we use the common network-theory convenience of defining $J_{in}(\tau)$ to be zero for all intervals prior to some initial interval ($\tau = 0$), then we have

$$J_{out}(\tau) = J(0)p(\tau) + J(1)p(\tau - 1) + \cdots = \sum_{T=0}^{\tau} J_{in}(\tau - T)p(T). \quad (1)$$

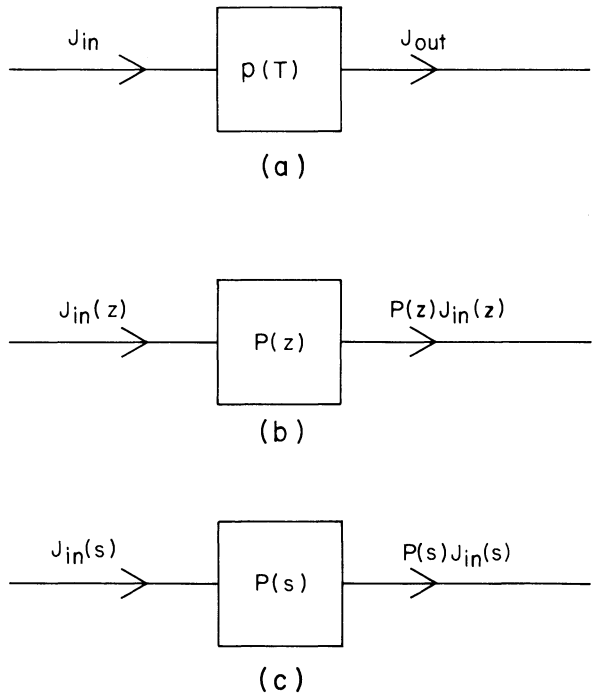

FIG. 1. (a) Network representations of a stochastic time delay. (b) The z-transform version. (c) The Laplace transform version.

In continuous time, $J_{in}(t)$ would be the rate at which individuals are entering the process at time t; and $J_{in}(t)dt$ would be the number of individuals entering during the interval from t to $t + dt$. $p(T)$ is the proportion of those individuals expected to emerge in an interval of the same duration, T units of time later (i.e., the interval from $t + T$ to $t + T + dt$). The sum representing the output flow now is expressed as an integral:

$$J_{out}(t) = \int_0^t J_{in}(t - T)p(T)dT. \quad (2)$$

It is well known that the processes of weighted summation represented by Eqs. 1 and 2 are carried out most easily in terms of linear transforms, whereby they are reduced to simple multiplication:

$$J_{out}(q) = J_{in}(q)P(q) \quad (3)$$

where, for discrete time,

$$P(q) = \sum_{T=0}^{\infty} p(T)q^{\pm T}, \quad (4)$$

and, for continuous time

$$P(q) = \int_0^{\infty} p(T)e^{\pm qT}dT. \quad (5)$$

With q replaced by s and with the plus sign retained in the exponent on the right, those familiar with probability theory immediately would recognize $P(q)$ as the generating function of the probability density, $p(\cdot)$ (Bailey 1964, p. 5–15). With q in Eq. 4 replaced by z and

TABLE 1. The mean (T_m), variance (σ_T^2), and coefficient of skewness [$\gamma(T)$] of discrete and continuous distributions in terms of the Laplace transforms [$P(s)$] and z transforms [$P(z)$] of their density functions. z and s are the complex variables of the z and Laplace transforms, respectively; σ_T is the standard deviation of the distribution; and τ_u is the unit of discrete time

	For discrete distributions*	For continuous distributions
Mean (T_m)	$\lim_{z\to 1}\left[-\frac{dP(z)}{dz}\right]\tau_u$	$\lim_{s\to 0}\left[-\frac{dP(s)}{ds}\right]$
Variance (σ_T^2)	$\lim_{z\to 1}\left[\left(-z\frac{d}{dz}\right)^2 P(z)\right]\tau_u^2 - T_m^2$	$\lim_{s\to 0}\left[\frac{d^2P(s)}{ds^2}\right] - T_m^2$
Coefficient of skewness ($\gamma(T)$)	$\frac{\lim_{z\to 1}\left[\left(-z\frac{d}{dz}\right)^3 P(z)\right]\tau_u^3 - 3T_m\sigma_T^2 - T_m^3}{\sigma_T^3}$	$\frac{\lim_{s\to 0}\left[-\frac{d^3P(s)}{ds^3}\right] - 3T_m\sigma_T^2 - T_m^3}{\sigma_T^3}$

* In Table 1, τ_u is the unit of discrete time. Thus, if the unit of discrete time were one day, then the mean would be given in days, the variance in days^2, and the coefficient of skewness would be dimensionless.

with the minus sign retained in the exponent on the right, those familiar with linear difference equations or with analysis of discrete-time systems immediately would recognize the z transform. With q replaced by s and with the minus sign retained on the right in Eq. 5, those familiar with linear differential equations or with continuous-time systems analysis immediately would recognize the Laplace transform. For consistency with the previous paper (Lewis 1976), the z- and Laplace-transform notation will be used here. The transformed versions of the stochastic time delay of Fig. 1a are depicted in Figs. 1b and 1c.

If $p(T)$ is the probability density of delay times for those individuals entering the process under consideration, then the mortality of those undergoing the process will prevent $p(T)$ from being conservative:

$$\sum_{T=0}^{\infty} p(T) < 1 \qquad \text{for discrete time,} \tag{6}$$

$$\int_0^{\infty} p(T)dT < 1 \qquad \text{for continuous time.} \tag{7}$$

In that case the mean and the various moments of the delay time will be infinite (since some of those that enter the process never leave it). On the other hand, if $p(T)$ is the density function of delay times having been undergone by those emerging from the process, then the effects of mortality are set aside and $p(T)$ is a conservative probability density function:

$$\sum_{T=0}^{\infty} p(T) = 1 \qquad \text{for discrete time,} \tag{8}$$

$$\int_0^{\infty} p(T)dT = 1 \qquad \text{for continuous time.} \tag{9}$$

In that case, the mean and various moments of the stochastic time delay may be finite and computable by means of standard procedures from generator-function theory or from z- and Laplace-transform theory. Table 1 gives three commonly cited distribution parameters in terms of the transformed density functions. The coefficient of skewness (sometimes called the obliquity) is defined to be the third central moment divided by the cube of the standard deviation.

EXAMPLES OF STOCHASTIC TIME DELAYS AND THEIR TRANSFORMS

Probably the simplest continuous stochastic time delay is that exhibited by an ideal Poisson process, the distribution of passage times (or time delays) through which is exponential:

$$p(T) = \alpha e^{-\alpha T}. \tag{10}$$

Furry first considered a time delay of this type in the growth of a nonbiological population, namely a cascade shower of cosmic rays (Kendall 1949). Kendall later gave it an admittedly questionable biological interpretation as a first step in his consideration of stochastic delays. The problem with it is the lack of a finite initial latency (Fig. 2a). Many processes that one might wish to represent with stochastic time delays exhibit apparently irreducible minimum times of completion. Thus, once an individual has entered such a process, its probability of completing the process in a time less than the minimum should be represented as zero; if the process is represented as a stochastic time delay, then that delay should have a finite initial latency, preferably one equal to the minimum completion time. A sequence of Poisson processes, each with the exponential distribution of Eq. 10, can exhibit a very good approximation to a minimum completion time (finite initial latency). Kendall (1948) found that a sequence of 20 such processes provided a very good match to the distribution of intervals between binary fissions (including the finite initial latency) observed by Kelly and Rahn (1932) in *Bacterium aerogenes* (see Fig. 2b).

The distribution of delay times provided by the elementary Poisson process and described by Eq. 10 can be represented by its Laplace transform, $\alpha/(s + \alpha)$. A sequence of k such processes provides a gamma distribution of delay times (Karlin 1969, p. 8),

$$P(T) = \alpha^k T^{k-1} e^{-\alpha T}/k!, \tag{11}$$

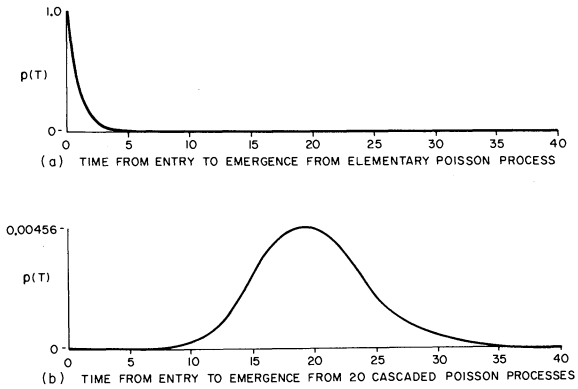

FIG. 2. Time-delay distributions used by Kendall (1948) in his model of binary fission.

the Laplace transform of which is

$$p(s) = [\alpha/(s + \alpha)]^k. \tag{12}$$

Letting k equal 20, we very easily can depict Kendall's deathless binary fission model in network form, as shown in Fig. 3. Here J_{in} represents the flow of new fission products (newly formed bacteria per unit time) into the process of maturation and J_{out} represents the flow of mature bacteria out of the process into the final moment of division.

The discrete-time analog of the gamma distribution is the negative binomial distribution (Karlin 1969, p. 9). The corresponding elementary process (i.e., the analog of the Poisson process) and its transform are depicted in Fig. 4. In the version of Fig. 4a, individuals are depicted as flowing into the process from the left. $1 - \beta$ of them emerge immediately, and the rest pass through a fixed time delay of duration one to merge with the new incoming flow. A single process of this type leads to a geometric distribution of time delays. k such processes in sequence would provide a negative binomial distribution of delays,

$$p(T) = \binom{T + k - 1}{k - 1}(1 - \beta)^k\beta^T, \tag{13}$$

the z transform of which is

$$p(z) = [(1 - \beta)z/(z - \beta)]^k. \tag{14}$$

Both the gamma and the negative binomial distributions exhibit positive skewness (i.e., both are skewed toward delay times greater than the mean). The binomial distribution, on the other hand, offers the possibility of being skewed in either direction or of being symmetric about the mean. The elementary process and its z transform are depicted in Fig. 5. In the version of Fig. 5a, individuals are depicted as flowing in from the left, with β of them entering the time delay of duration one and $1 - \beta$ of them bypassing it to merge with those that entered it one unit of time earlier. A binomial distribution of time delays is generated by k such processes:

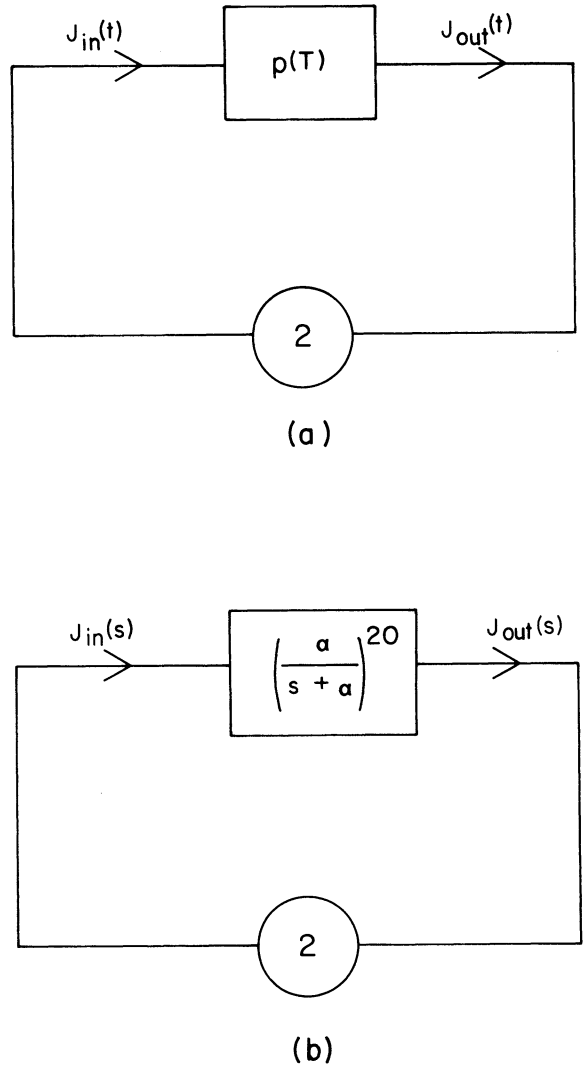

FIG. 3. A network representation of Kendall's (1948) model. (a) Deathless binary fission with the distribution of fission intervals given by $p(T)$. (b) The Laplace-transform version, with the fission intervals distributed according to a 20th-order gamma distribution.

$$p(T) = \binom{k}{T}(1 - \beta)^{k-T}\beta^T. \tag{15}$$

The z transform of this density function is

$$P(z) = (\beta z^{-1} + 1 - \beta)^k. \tag{16}$$

Of course there are many other distributions that one might select for a stochastic time delay. However, by adding the fixed time delay, which can provide an absolute initial latency, and one additional distribution, the continuous-time beta distribution, along with its special case, the uniform distribution, we have a reasonably large and versatile repertoire at hand. These various distributions are listed in Table 2, along with their transforms, their means, and their standard deviations. In

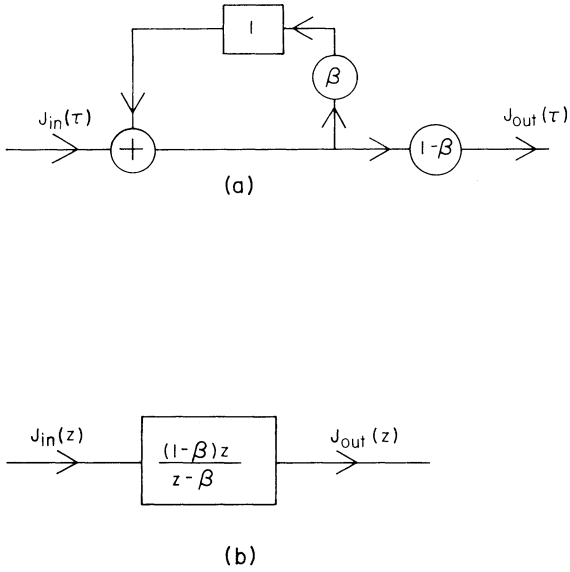

FIG. 4. (a) Network representation of the elementary process of the negative binomial distribution. (b) z-transform version.

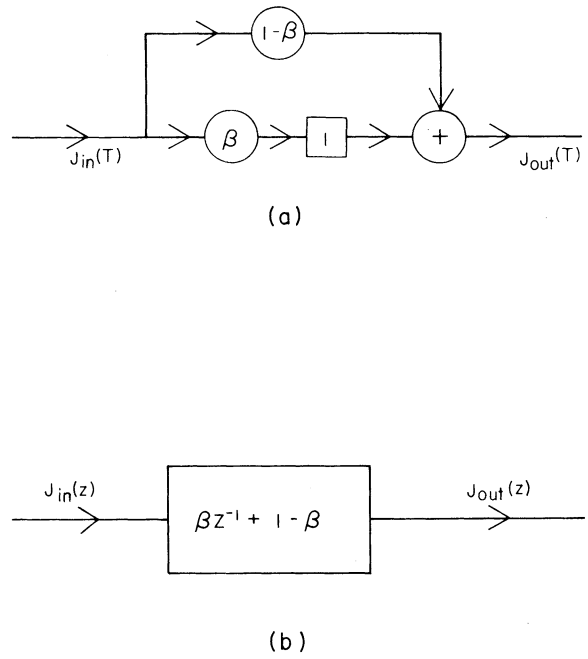

FIG. 5. (a) Network representation of the elementary process of the binomial distribution. (b) z-transform version.

several of the discrete distributions, the time dimension is not carried explicitly in the parameters. In those cases, time has been incorporated explicitly in the means and standard deviations by the inclusion of the factor τ_u, the unit of discrete time.

Construction of Network Models of Natality Cycles with Stochastic Time Delays

As an example of a natality cycle in which delay times might be random variables and in which time classes other than age are important, consider the following, highly idealized population of mammals. From the time of birth, each female requires time T_1 to reach sexual maturity, which is signalled by her first ovulation. The proportion of female offspring that survive to maturity is γ_1. Ovulation is a periodic phenomenon, recurring with interval T_2 until the female becomes pregnant. Her probability of surviving an ovulation interval is γ_2, and her probability of becoming pregnant at the time of ovulation is $(1 - \beta_1)$. Once pregnant, the female faces a gestation period of duration T_3, with a probability γ_3 of surviving. The expected number of female offspring per litter is n. Immediately following parturition, the female returns to the ovulation cycle, once again facing the same probabilities of impregnation and survival. Although this hypothetical life cycle admittedly is oversimplified, it nonetheless includes phenomena that are not represented in the usual Leslie-type model or its continuous-time counterparts, the renewal and von Foerster equations. They are easily represented in the network construct, however; and the resulting network model is easy to modify to incorporate more realistic complications (e.g., see the sequential modification of the finback whale model in Lewis 1972). At this point, we are interested in one particular type of complication, namely the possibility that the time to maturity, the ovulation interval, and the gestation period might not be precisely fixed, but might exhibit some random variations.

Figure 6a shows a network realization of the life cycle with fixed time delays. Using Laplace or z transforms, one can represent this network model very simply with linear flow graphs (Mason 1956; Lewis 1976), such as those in Figs. 6b and 6c. To convert the model from one with fixed time delays to one with stochastic time delays, one simply replaces each e^{-sT} or z^{-T} in the flow graph with the Laplace or z transform of the hypothesized time-delay density function, as shown in Figs. 6d and 6e.

A characteristic equation for the resulting model can be found by inspection from Mason's algorithm

$$(1 - L_1)(1 - L_2)(1 - L_3)\cdots(1 - L_m)^{**} = 0, \quad (17)$$

where L_i is the product of all factors around the ith loop

→

FIG. 6. Network model of a simple natality cycle. (a) Version with fixed time delays for maturation, ovulation, and gestation. (b) and (c) z- and Laplace-transform versions of (a). (d) and (e) z- and Laplace-transform versions in which the three time delays are random variables with distributions p_1, p_2 and p_3.

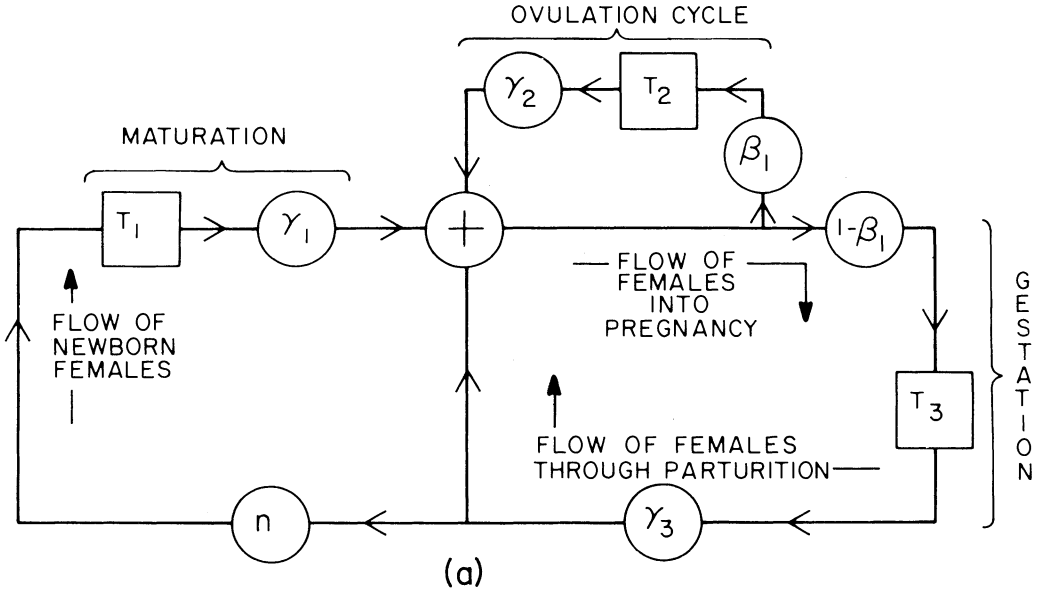
OVULATION CYCLE
MATURATION
T_1
γ_1
γ_2
T_2
β_1
$1-\beta_1$
T_3
γ_3
n
FLOW OF NEWBORN FEMALES
FLOW OF FEMALES INTO PREGNANCY
FLOW OF FEMALES THROUGH PARTURITION
GESTATION

(a)

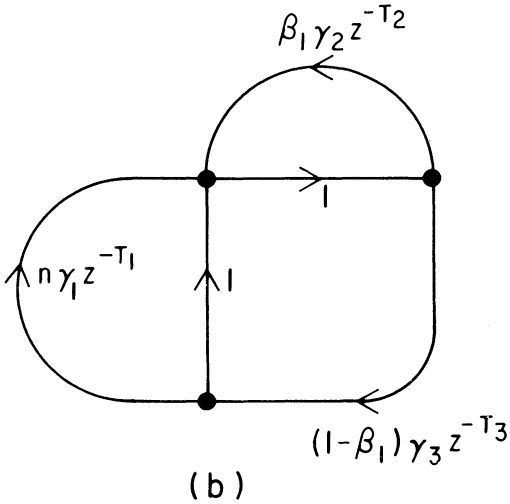
$\beta_1\gamma_2 z^{-T_2}$
1
$n\gamma_1 z^{-T_1}$
1
$(1-\beta_1)\gamma_3 z^{-T_3}$

(b)

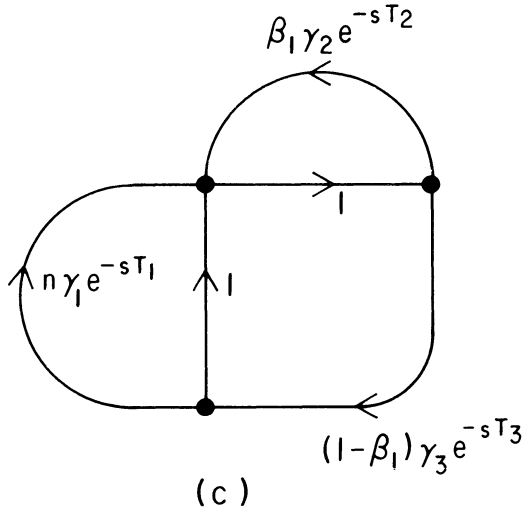
$\beta_1\gamma_2 e^{-sT_2}$
1
$n\gamma_1 e^{-sT_1}$
1
$(1-\beta_1)\gamma_3 e^{-sT_3}$

(c)

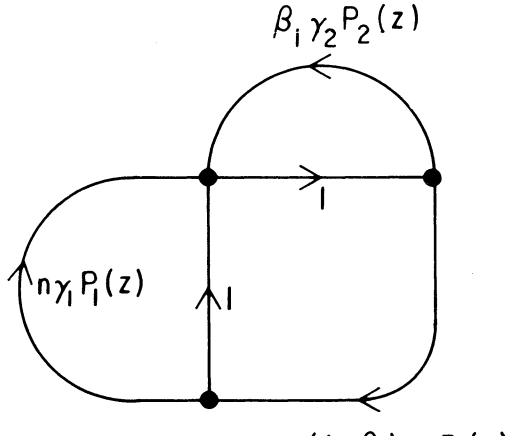
$\beta_1\gamma_2 P_2(z)$
1
$n\gamma_1 P_1(z)$
1
$(1-\beta_1)\gamma_3 P_3(z)$

(d)

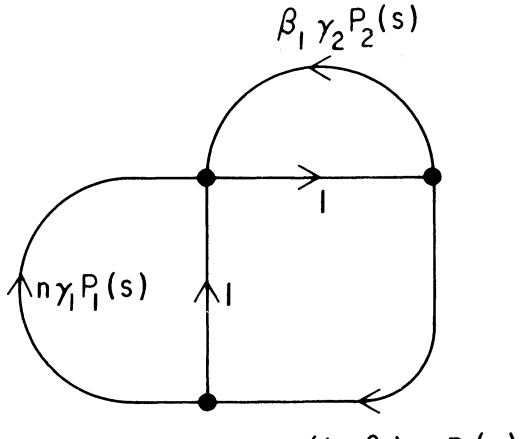
$\beta_1\gamma_2 P_2(s)$
1
$n\gamma_1 P_1(s)$
1
$(1-\beta_1)\gamma_3 P_3(s)$

(e)

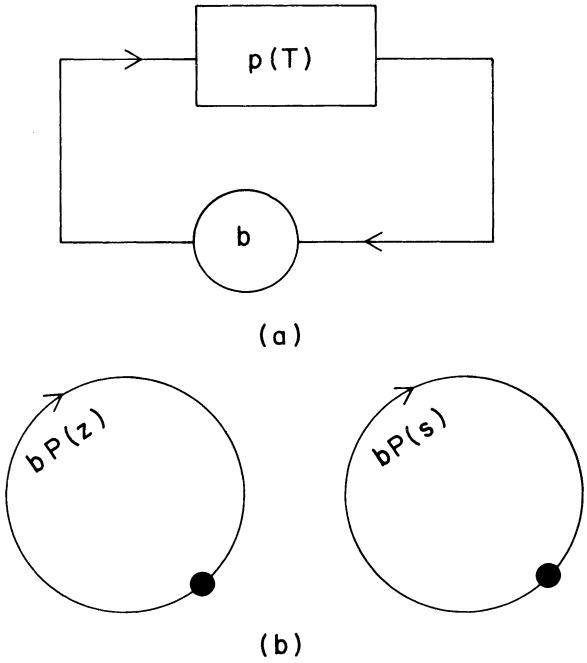

FIG. 7. (a) A simple network generalization of the models of Keyfitz (1972) and Kendall (1948). (b) z- and Laplace-transform versions.

in the network (a loop being defined as a closed path passing only once through any node along its course); and all terms involving products of touching loops are dropped (Lewis 1976). In each of the flow diagrams of Fig. 6 there are three closed loops, the factor products of which are $\beta_1\gamma_2P_2$, $(1 - \beta_1)\gamma_3P_3$, and $n\gamma_1\gamma_3(1 - \beta_1)P_1P_3$, respectively. Since all of these loops touch one another, all of the cross-product terms in Eq. 17 are dropped; and we have the following characteristic equation:

$$1 - \beta_1\gamma_2P_2 - (1 - \beta_1)\gamma_3P_3 - n\gamma_1\gamma_3(1 - \beta_1)P_1P_3 = 0, \quad (18)$$

which can be solved for z or s with the aid of commonly available computer algorithms to yield the roots of the system.

Because we have employed Laplace and z transforms, these roots can be interpreted directly in terms of dynamic patterns of growth and oscillation of the modeled population (Oster and Takahashi 1974; Lewis 1976). For example, the largest real root will represent the dominant exponential or geometric growth pattern predicted by the model; and many of the other roots will represent periodic population oscillations predicted by the model. The latter roots can be examined for their implications with respect to the predicted propensity of the modeled population to sustain the oscillations. Specific examples of such considerations are presented in the following section.

THE EFFECTS OF DELAY-TIME DISTRIBUTIONS ON PREDICTED POPULATION GROWTH AND WAVE ACTIVITY IN A SIMPLE NATALITY CYCLE

Consider the simple natality cycle depicted in Fig. 7. Individual, newly formed organisms enter a maturation process of duration T. At the end of the process, each emerging mature organism immediately produces some

TABLE 2. z and Laplace transforms of various stochoastic time delay distributions. z and s are the complex variables of the z and Laplace transforms, respectively; and τ_u is the unit of discrete time.

Distribution	Transform	Mean	Standard deviation
Fixed delay of duration T_0	e^{-sT_0} or z^{-T_0}	T_0	0
Continuous uniform from T_1 to T_2	$\frac{e^{-sT_1} - e^{-sT_2}}{(T_2 - T_1)s}$	$\frac{T_1 + T_2}{2}$	$\frac{T_2 - T_1}{2\sqrt{3}}$
Discrete uniform from T_1 to T_2 inclusive	$\frac{z^{-T_1} - z^{-T_2}}{(1 - z^{-1})(T_2 - T_1 + 1)}$	$\frac{T_1 + T_2}{2}$	$\sqrt{\left[\frac{(T_2 - T_1 + 1)^2 - 1}{12}\right]}$
Geometric	$\frac{(1 - \beta)z}{z - \beta}$	$\frac{\beta\tau_u}{1 - \beta}$	$\frac{\sqrt{\beta}}{1 - \beta}\tau_u$
Negative binomial	$\left(\frac{(1 - \beta)z}{z - \beta}\right)^k$	$\frac{k\beta}{1 - \beta}\tau_u$	$\frac{\sqrt{k\beta}}{1 - \beta}\tau_u$
Exponential	$\frac{\alpha}{s + \alpha}$	$1/\alpha$	$1/\alpha$
Gamma	$\left(\frac{\alpha}{s + \alpha}\right)^k$	k/α	$\sqrt{k}/\alpha$
Beta	$\frac{(s^{\beta-1} - 1)}{s^{(\alpha-1)(\beta-1)}}(1 - e^{-s})$	$\frac{\alpha}{\alpha + \beta}$	$\frac{\sqrt{\alpha\beta}}{(\alpha + \beta)\sqrt{\alpha + \beta + 1}}$
Binomial	$(\beta z^{-1} + 1 - \beta)^k$	$k\beta\tau_u$	$\sqrt{k\beta(1 - \beta)}\,\tau_u$

number of offspring and then becomes reproductively inactive or dies.

The parameter b includes two factors, the expected proportion of individuals that survive to maturity and the expected number of offspring per surviving mature individual. If b were equal to two, this model could represent a deathless population undergoing binary fission. The model also could represent an approximation to certain populations with sexual reproduction (e.g., populations in which adults survive only long enough to produce one batch of offspring, as in the case of salmon), in which case the individuals represented in the network would be the females. Clearly, such a system could be represented rather easily by a Leslie-type model or its equivalent. However, if one wishes to consider the possibility that the duration of the maturation process is a random variable, then it is convenient to use the linear transform methods presented in this paper, retaining explicitly the parameters of the hypothetical distributions of that random variable.

Here, we shall consider and compare the effects of four different distributions on the predicted dynamics of the population. Those four are: (1) fixed time delay; (2) gamma-distributed time delay; (3) negative binomial distributed time delay; and (4) binomial distributed time delay. The analysis is facilitated by the fact that, in this very simple case, the roots of the characteristic equations can be obtained without the aid of a computer. The general form of the characteristic equation is

$$1 - bP = 0, \tag{19}$$

where P is a function of z or s, depending on whether the distribution is continuous or discrete, and represents a conservative stochastic time delay. The form of this equation for each of the distributions under consideration is as follows:

1) Fixed time delay

$$1 - bz^{-T_0} = 0, \tag{20}$$

2) Gamma-distributed time delay

$$1 - b\alpha^k/(s + \alpha)^k = 0, \tag{21}$$

3) Negative binomial-distributed time delay

$$1 - b\,[(1 - \beta)z/(z - \beta)]^k = 0, \tag{22}$$

4) Binomial-distributed time delay

$$1 - b(\beta z^{-1} + 1 - \beta)^k = 0. \tag{23}$$

The roots of these equations are easy to obtain; and the method of interpretation of the roots can be found in virtually any elementary text on linear differential equations, linear difference equations, theory of complex variables, or linear systems theory (Lewis 1976). In each case, one root (z_0 or s_0 will represent the ultimately dominant pattern of geometric growth (z_0^T) or exponential growth ($e^{s_0 t}$); and most of the remaining roots will represent periodic oscillations of the populations. Such oscillations would be triggered by a transient disturbance of the population; and, following that disturbance, their magnitude relative to the magnitude of the population itself either would remain constant or would die away geometrically or exponentially. This tendency to die away can be expressed quantitatively as a damping coefficient, w for continuous time and r for discrete time. Thus, following a transient disturbance at time t_0 or τ_0, a particular periodic oscillation would die away as

$$e^{-w(t-t_0)},$$

in a continuous-time model, or as

$$(1/r)^{(\tau-\tau_0)},$$

in a discrete-time model. The oscillation would tend to persist if r or w were small (i.e., r close to one, w close to zero); and it would be increasingly less persistent as r or w increased. In addition to its damping coefficient, each periodic oscillation will have a corresponding period, T. These various parameters can be extracted very easily from the roots of the characteristic equations and are presented in the following arrays for each of the four models:

Fixed time delay

$$z_0 = |b^{1/T_0}|, \tag{24}$$

T_0 odd $\cdots$ $(T_0 - 1)/2$ distinct periodic oscillations,

$$T = T_0, T_0/2, T_0/3, \cdots, 2T_0/(T_0 - 1), \tag{25}$$

T_0 even $\cdots$ $T_0/2$ distinct periodic oscillations,

$$T = T_0, T_0/2, T_0/3, \cdots, 2,$$

$$r = 1 \text{ for all oscillations;}$$

Gamma-distributed time delay

$$s_0 = \alpha(|b^{1/k}| - 1). \tag{26}$$

The period of the jth distinct oscillation is

$$T_j = \{2\pi/[\alpha|b^{1/k}|\sin(2\pi j/k)]\}, \tag{27}$$

$$j = 1,2,3,\cdots,(k - 1)/2 \text{ for } k \text{ odd},$$
$$j = 1,2,3,\cdots,(k - 2)/2 \text{ for } k \text{ even}.$$

The corresponding damping coefficient is

$$w_j = \alpha|b^{1/k}|[1 - \cos(2\pi j/k)]. \tag{28}$$

Negative binomial-distributed time delay

$$z_0 = \beta/[1 - (1 - \beta)|b^{1/k}|]. \tag{29}$$

The period of the jth distinct oscillation is

$$T_j = 2\pi/\tan^{-1}\{(1 - \beta)|b^{1/k}|\cos(2\pi j/k)/[1 - (1 - \beta)|b^{1/k}|\cos(2\pi j/k)]\}\tau_u, \tag{30}$$

$$j = 1,2,3,\cdots,(k - 1)/2 \text{ for } k \text{ odd},$$
$$j = 1,2,3,\cdots,k/2 \text{ for } k \text{ even}.$$

The corresponding damping coefficient is

$$r_j = [1 - 2(1 - \beta)|b^{1/k}|\cos(2\pi j/k) + (1 - \beta)^2|b^{1/k}|^2]^{1/2}/[1 - (1 - \beta)|b^{1/k}|]. \tag{31}$$

Binomial-distributed delays

$$z_0 = \beta|b^{1/k}|/[1 - (1 - \beta)|b^{1/k}|]. \quad (32)$$

The period of the jth distinct oscillation is

$$T_j = (2/\tan^{-1} \{\sin(2\pi j/k)/[1 - (1 - \beta)|b^{1/k}|\cos(2\pi j/k]\})\tau_u, \quad (33)$$

$$j = 1,2,3,\cdots,(k - 1)/2 \text{ for } k \text{ odd},$$
$$j = 1,2,3,\cdots,k/2 \text{ for } k \text{ even}.$$

The corresponding damping coefficient is given by Eq. 31.

In the case of the discrete-time model with a fixed time delay, a transitory external stimulus would trigger oscillatory activity comprising a combination of $(T_0 - 1)/2$ component oscillations, each with its own period and each persisting indefinitely (since the discrete-time damping coefficient, r, equals 1 for each component). In the cases of the models with stochastic time delays, transitory external stimuli also will trigger oscillatory activity, but the relative amplitudes of the component oscillations will die away (since the damping coefficient is greater than one for each component oscillation in the discrete-time models and greater than zero for each component oscillation in the continuous-time model). This result follows from well-known properties of equations, which have appeared many times in the population biology literature (e.g., Parlett 1970). What interests us here, however, is not the fact that the oscillatory activity dies away when stochastic time delays are present, but rather how the rate of that dying away depends upon the parameters of the stochastic time delay distribution (or the parameters of the density function). In this way, we can determine how the propensity of the system toward sustained oscillations depends upon the parameters of the stochastic time delay. This question was attacked explicitly by Keyfitz (1972) for an assumed cosinusoidal distribution of time delays between birth and offspring production in a human population. Here, we can attack it for three other distributions. Examination of Eqs. 28 and 31 reveals that the more persistent oscillations in each case will be those for which j is small (the most persistent being those corresponding to $j = 1$). These also happen to be the oscillations of longest period. In order that the hypothetical time-delay distributions provide good approximations to a finite initial latency, k should be relatively large in each case (e.g., 20, as in the case of Kendall's (1948) model of binary fission). Therefore, in order to attack the question at hand, we should concern ourselves with situations corresponding to large values of k and small values of j. In such situations, Eqs. 27, 30, and 33 all are approximated quite well by

$$T_j \simeq T_m/j, \quad (34)$$

where T_m is the mean delay time (see Table 2); Eq. 28 is approximated quite well by

$$w_n \simeq 2\pi^2 j^2(\alpha/k^2) = 2\pi^2 j^2(\sigma_T^2/T_m^3) \quad (35)$$
$$= (\pi^2 j^2 \gamma^2/2T_m) \quad (36)$$
$$= (\pi^2 j^2 \gamma^3/4\sigma_T) \quad (37)$$
$$\gamma = 2/\sqrt{k} \quad \text{(Table 1)},$$

and Eq. 31 is approximated quite well by

$$r_j \simeq 1/(1 - 2\pi^2 j^2(1 - \beta)/k^2\beta^2) = 1/(1 - 2\pi^2 j^2 \sigma_T^2 \tau_u/T_m^3). \quad (38)$$

For the binomial and negative binomial distributions, the effects of skewness (γ) on the persistence of waves can be deduced (for large k and small j) by elementary sensitivity analysis.

For negative binomial distributed delays:

$$\gamma = (1 + \beta)/\sqrt{k\beta}, \quad (39)$$

$$dr_j/d\gamma\Big|_{T_m = \text{constant}} = 4\pi^2 j^2(\sigma_T^3/T_m^3), \quad (40)$$

$$dr_j/d\gamma\Big|_{\sigma_T = \text{constant}} = -6\pi^2 j^2(\sigma_T^3/T_m^3). \quad (41)$$

For binomial distributed delays:

$$\gamma = (1 - 2\beta)/\sqrt{k\beta(1 - \beta)}, \quad (42)$$

$$dr_j/d\gamma\Big|_{T_m = \text{constant}} = -[4\pi^2 j^2 \sigma_T^3/T_m^3(1 + 2\sigma_T^2/T_m\tau_u)], \quad (43)$$

$$dr_j/d\gamma\Big|_{\sigma_T = \text{constant}} = -(3\pi^2 j^2 \sigma_T \tau_u/T_m^2). \quad (44)$$

Eqs. 34 through 44 can be interpreted as follows. For large values of k and small values of j, the simple natality cycle with any of the three distributions possesses an oscillatory component whose period is directly proportional to the mean maturation time and whose persistence exhibits the following relationships to the parameters of the distribution of maturation times: with a fixed mean, the persistence of the oscillation decreases markedly both with increasing standard deviation and with increasing coefficient of skewness (i.e., increasing skewness toward times greater than the mean); with fixed standard deviation, the persistence increases markedly with increasing mean and decreases markedly with increasing coefficient of skewness. Although the details of the relationships differ, the conclusions reached by Keyfitz (1972) for the cosinusoidal distribution were essentially the same; the system should exhibit less propensity toward sustained oscillatory activity for maturation time distributions with larger standard deviations and for maturation-time distributions that are more skewed toward times greater than the mean.

Returning to Eqs. 24, 26, 29 and 32, we can examine and compare the dominant growth patterns in the four models. Considering the case (Eq. 24) in which the maturation time is fixed, one finds that the dominant growth pattern simply is that of b-fold increase or decrease every T_0 units of time. Thus, in that special case, the b-folding time (i.e., the time required for the popula-

TABLE 3. Dominant growth patterns in a simple natality cycle with various stochastic time delays. In each case, k is the number of elementary processes (e.g., the number of coupled Poisson processes underlying the gamma distribution); T_b is the time required for a b-fold increase in population size ($b = 2$ in each case); T_m is the mean time delay; σ_T is the standard deviation of the time-delay distribution; and β is the parameter of the elementary process

Value of k	Binomial distribution						Negative binomial distribution						Gamma distribution	
	$\beta = 0.1$		$\beta = 0.5$		$\beta = 0.9$		$\beta = 0.1$		$\beta = 0.5$		$\beta = 0.9$			
	T_b/T_m	σ_T/T_m	T_b/T_m	σ_T/T_m	T_b/T_m	σ_T/T_m	T_b/T_m	σ_T/T_m	T_b/T_m	σ_T/T_m	T_b/T_m	σ_T/T_m	T_b/T_m	σ_T/T_m
1	...	...	...	...	0.654	1.054	...		...	...	0.950	0.333	0.693	1.000
2	...	...	0.648	1.000	0.817	0.745	...		0.786	0.707	0.978	0.236	0.837	0.707
4	...	...	0.826	0.707	0.906	0.527	...		0.905	0.500	0.990	0.167	0.916	0.500
8	0.463	1.118	0.913	0.500	0.953	0.373	0.489	1.061	0.955	0.354	0.995	0.118	0.957	0.354
16	0.767	0.791	0.957	0.354	0.976	0.264	0.785	0.750	0.978	0.250	0.998	0.083	0.979	0.250
32	0.888	0.559	0.978	0.250	0.988	0.186	0.898	0.530	0.989	0.177	0.999	0.059	0.989	0.177
64	0.945	0.395	0.989	0.177	0.994	0.132	0.950	0.375	0.995	0.125	0.999	0.042	0.995	0.125
128	0.973	0.280	0.995	0.125	0.997	0.093	0.975	0.265	0.997	0.088	1.000	0.029	0.997	0.088
256	0.986	0.198	0.997	0.088	0.998	0.066	0.988	0.188	0.999	0.063	1.000	0.021	0.999	0.063
512	0.993	0.140	0.999	0.063	0.999	0.047	0.994	0.133	0.999	0.044	1.000	0.015	0.999	0.044

tion to change by a factor of b) is precisely equal to the mean maturation time. Using this as a basis of comparison, we can calculate directly from s_0 or z_0 the ratio, T_b/T_m, of the b-folding time to the mean maturation time. Results for b equal to 2 are presented in Table 3 for the three distributions over 10 values of the parameter k (which represents the number of elementary processes in each case). Along with these results are presented the corresponding values of the ratio, σ_T/T_m, of the standard deviation to the mean of the maturation time.

It is interesting to note from the table that for all moderate values of standard deviation, the b-folding time approximates the mean maturation time, the former in each case being slightly less than the latter. For all seven distributions represented, the b-folding time is within 10% of the mean maturation time for all values of standard deviation less than or equal to half the mean maturation time. Thus, even if the distribution of time delays is not especially narrow, as far as the dominant pattern of growth is concerned the stochastic time delay appears to behave very much like a simple, single-valued delay of duration T_m.

Entries are absent for low values of k under four of the distributions represented in Table 3. This simply points up the lack of finite initial latency in the discrete-time models when k is small, leading to a non-zero probability that new offspring will produce a second generation of offspring immediately. For large values of k, this probability is extremely small and quite reasonably can be ignored. For small values of k, however, it can be quite significant. In fact, it can lead to a predicted instantaneous population explosion (the modeled population instantaneously going to infinity). This occurs when the instantaneous multiplication around the natality cycle is equal to or greater than one. To determine the instantaneous multiplication around any cycle in a Laplace- or z-transformed network model, one simply invokes the initial-value theorem and takes the limit of the product of all factors around the cycle as $|z|$ goes to infinity or s times the product of all factors around the cycle as s goes to infinity (Cadzrow, 1973).

In the cases of cycles with continuously distributed time delays, the instantaneous multiplication usually will be zero. In the model of Fig. 7 with gamma-distributed delay, for example, the instantaneous multiplication around the cycle is

$$\lim_{s \to \infty} [sb\alpha^k/s + \alpha)^k] = 0. \tag{45}$$

In the models of Fig. 7 with binomial- and negative binomial-distributed delays, on the other hand, the instantaneous multiplications are nonzero. In the case of the negative binomial distribution we have

$$\lim_{z \to \infty}\{b\,[(1 - \beta)z/(z - \beta)]^k\} = b(1 - \beta)^k, \tag{46}$$

and in the case of the binomial distribution

$$\lim_{z \to \infty}\{b[\beta z^{-1} + (1 - \beta)]^k\} = b(1 - \beta)^k. \tag{47}$$

Thus, the model of a simple natality cycle with binomial- or negative binomial-distributed maturation times will predict an instantaneous population explosion when $b(1 - \beta)^k$ is greater than or equal to one; the corresponding entries in Table 3 are left blank. If these same distributions were coupled with fixed time delays, so that a term of the form z^{-T_F} appeared in each of the resulting transforms, then finite initial latency would be guaranteed and the instantaneous multiplication of the cycle would be zero.

DISCUSSION

The analytical methods presented in this paper share the limitations of most of the rest of network and systems theory, that they apply to linear models with lumped, time-invariant parameters, which carry only the expected values of state variables. In spite of these limitations, network and systems theory has been extremely useful for deducing or predicting dynamic be-

havior when applied judiciously to real systems. In the cases of populations, the theory has been used to deduce, among other things, the tendencies (under given hypothetical circumstances) to shift away from or toward presumed stable values (e.g., Rosenzweig and MacArthur 1963), the tendencies of populations (under given hypothetical circumstances) to sustain oscillations (Keyfitz 1972), and the periods of those oscillations (Oster and Takahashi 1974). In each case, the key qualifying phrase is "under given circumstances," i.e., within the given ecological context under which the model parameters of the population were estimated.

It is true of systems models in general, whether they are linear or nonlinear, lumped-parameter or distributed-parameter, stochastic or deterministic, that the dynamic properties one deduces from them are whole-system properties, generally not attributable to a single element or a single subsystem within the system as a whole. In any linear systems model, the dynamics can be characterized completely in terms of the roots of the characteristic equation derived for the model. However, one commonly finds that the roots of a subsystem are obscured completely in the operation of the whole system in which it is embedded. Thus, for example, it is well known that a model comprising an ideal electrical capacitor in parallel with an ideal electrical inductor or an ideal mechanical spring in series with an ideal mass has roots that imply the presence of an undying oscillation of fixed period; yet when either of those same constructions is placed in the context of a larger systems model in such a way that it interacts, even to a very slight extent, with the other components of that model, then it no longer will exhibit the same roots or the same implied periodicity. Thus, the essential dynamic properties of subsystems in general depend, usually markedly, on the whole-system context of the subsystem. Therefore, one can reasonably conclude that if an actual subsystem (e.g., a population) is removed from the larger system (e.g., a community) of which it is part and attempts are made to determine the innate properties of that subsystem by studying it in isolation, what is learned may have very little to do with the operation of that same subsystem when it is replaced in its original context. However, certain innate properties may be sufficiently persistent or dominant to transcend context to some extent. Thus, for example, under very special circumstances an inductor-capacitor circuit may be pretuned to a desired period in isolation, then placed in its intended context (e.g., a television set) and retuned by minor adjustment to that same period.

In the cases of populations of organisms, there has been considerable concern over the relative importance of innate *versus* contextual factors in determining dynamic behavior. In the case of the pure growth component of dynamics (e.g., that corresponding to the dominant real root, s_0 or z_0, of a linear model), there is the possibility that modification of certain states internal to the individual organism (e.g., the state of the endocrine system) may have an important limiting effect. However, the modulation of those states that leads to growth limitation very likely is not innate but is produced by contextual factors (e.g., lack of space, leading to crowding) (Southwick 1958; Chitty 1960; Christian and Davis 1964). Thus it seems that the Darwinian hypothesis prevails; the tendency of a population to move toward or away from a stable level (and, indeed, the magnitude of the stable level itself) will transcend to a great extent the innate growth potential of the population and be determined instead by the population's interactions with other components of its ecological context. In the model of Fig. 7, for example, one should expect the parameter b (which represents the probability of survival and the fecundity/fertility of individuals) to depend rather markedly on ecological context; and b in turn is an important factor in the deduced dominant growth pattern of the population.

The matter does not seem so clearcut in the case of population oscillations. In the simple natality cycle represented in Fig. 7, for example, the propensity toward sustained oscillations (as given by Eqs. 35 and 38) is independent of b as are the periods of those oscillations (Eq. 34), both depending instead upon the statistical distribution of the time to reproductive maturity. In more complicated natality cycles, the propensity toward, and period of, oscillations might depend also on the distributions of ovulation intervals, the distributions of gestation periods, the distributions of nonreproductive lactation periods, the distributions of periods of regression, and the like. Clearly, just as the endocrinological state of an individual can be modulated by ecological context, so can these various periods and their distributions (e.g., the mean time to first ovulation in East African elephants apparently varies from 11 to 20 yr, depending on habitat and population density [Laws 1969]). However, the extent to which they can be modulated by external influences may well be limited; and the oscillatory tendency and oscillation periods of a population, therefore, may well be principally innate and transcend to a considerable extent that population's ecological context. This possibility has received considerable discussion in the literature (see Oster and Takahashi 1974 for a recent summary of arguments and evidence).

Except in the extreme and unlikely case of fixed time delays, the waves predicted by linear models all are damped relative to the predicted dominant growth pattern of the population. When, on the average, the modeled population is neither growing nor declining (i.e., $s_0 = 0$ or $z_0 = 1$), then the predicted waves are damped in the absolute sense. Therefore, on the basis of deductions from the linear models, one would not expect a population's innate propensity toward sustained wave activity to lead to undying oscillations modulating an otherwise steady background level. When persistent oscillations occur in this manner (e.g., those in lem-

mings or in the Canadian fur cycle), the reasonable presumption therefore seems to be that ecological context is playing a very important role. Nevertheless, in some cases the innate properties of the population itself may be important influencing factors. For example, the period of the sustained, albeit irregular, large-amplitude oscillations in salmon populations generally is the same as the mean generation interval, which in turn appears to be a more-or-less fixed innate parameter (e.g., see Parker 1962; Killick and Clemens 1963; Oster and Takahashi 1974 for other examples).

ACKNOWLEDGMENT

This research was supported by National Science Foundation Grant GK-42054.

LITERATURE CITED

Bailey, N. I. J. 1964. The elements of stochastic processes. John Wiley and Sons, New York. 249 p.

Cadzrow, J. A. 1973. Discrete-time systems. Prentice-Hall, Englewood Cliffs, New Jersey. 440 p.

Chitty, D. 1960. Population processes in the vole and their relevance to general theory. Canadian J. Zool. **38**:99–113.

Christian, J., and D. Davis. 1964. Endocrines, behavior and population. Science **146**:1550–1560.

Feller, W. 1941. On the integral equation of renewal theory. Ann. Math. Stat. **12**:243–267.

———. 1968. An introduction to probability theory and its applications. John Wiley and Sons, New York. 509 p.

Karlin, S. 1969. A first course in stochastic processes. Academic Press, New York. 502 p.

Kelly, C. D., and O. Rahn. 1932. The growth rate of individual bacterial cells. J. Bacteriol. **23**:147–153.

Kendall, D. G. 1948. On the role of variable generation time in the development of a stochastic birth process. Biometrika **35**:316–330.

———. 1949. Stochastic processes and population growth. J. R. Stat. Soc. Ser. B. **11**:230–264.

Keyfitz, N. 1972. Population waves, p. 1–38. *In* T.N.E. Greville [ed.] Population dynamics. Academic Press, New York.

Killick, S. R., and W. A. Clemens. 1963. The age, sex ratio and size of Fraser River sockeye salmon 1915 to 1960. Bull. Int. Pac. Salmon Fish. Comm. **14**:1–140.

Laws, R. M. 1969. Aspects of reproduction in the African elephant, *Loxodonta africana*. J. Reprod. Fertil. Suppl. **6**:193–217.

Leslie, P. H. 1945. On the use of matrices in certain population mathematics. Biometrika **33**:183–212.

Lewis, E. G. 1942. On the generation and growth of a population. Sankhya **6**:93–96.

Lewis, E. R. 1972. Delay line models of population growth. Ecology **53**:797–807.

———. 1976. Applications of discrete and continuous network theory to linear population models. Ecology **57**:33–47.

Mason, S. J. 1956. Feedback theory: further properties of signal flow graphs. Proc. Inst. Radio Eng. **44**:920–926.

Oster, G., and Y. Takahashi. 1974. Models for age-specific interactions in a periodic environment. Ecol. Monogr. **44**:483–501.

Parker, R. R. 1962. A concept of dynamics of pink salmon populations, p. 203–211. *In* N. J. Wilimovsky [ed.] Symposium on pink salmon. Univ. British Columbia, Inst. Fisheries, Vancouver.

Parlett, B. 1970. Ergodic properties of populations I: the one sex model. Theor. Pop. Biol. **1**:191–207.

Rosenzweig, M., and R. H. MacArthur. 1963. Graphical representation and stability conditions of predator-prey interaction. Am. Nat. **97**:209–223.

Southwick, C. 1958. Population characteristics of house mice living in English corn ricks: density relationships. Proc. Zool. Soc. London **131**:163–175.

von Foerster, H. 1959. Some remarks on changing populations, p. 382–407. *In* F. S. Stohlman [ed.] The kinetics of cellular proliferation. Grune and Stratton, New York.