CS 172: Computability and Complexity

Minimization of DFAs

Sanjit A. Seshia
EECS, UC Berkeley

Acknowledgments: L.von Ahn, L. Blum, M. Blum, A. Sinclair

What is Minimization?

Minimized DFA for language L

=

DFA **with fewest states** that recognizes L

Also called **minimal** DFA

Why is Minimization Important?

DFAs are how computers manipulate regular languages (expressions)

DFA size determines space/time efficiency

IS THIS **MINIMAL?**

NO

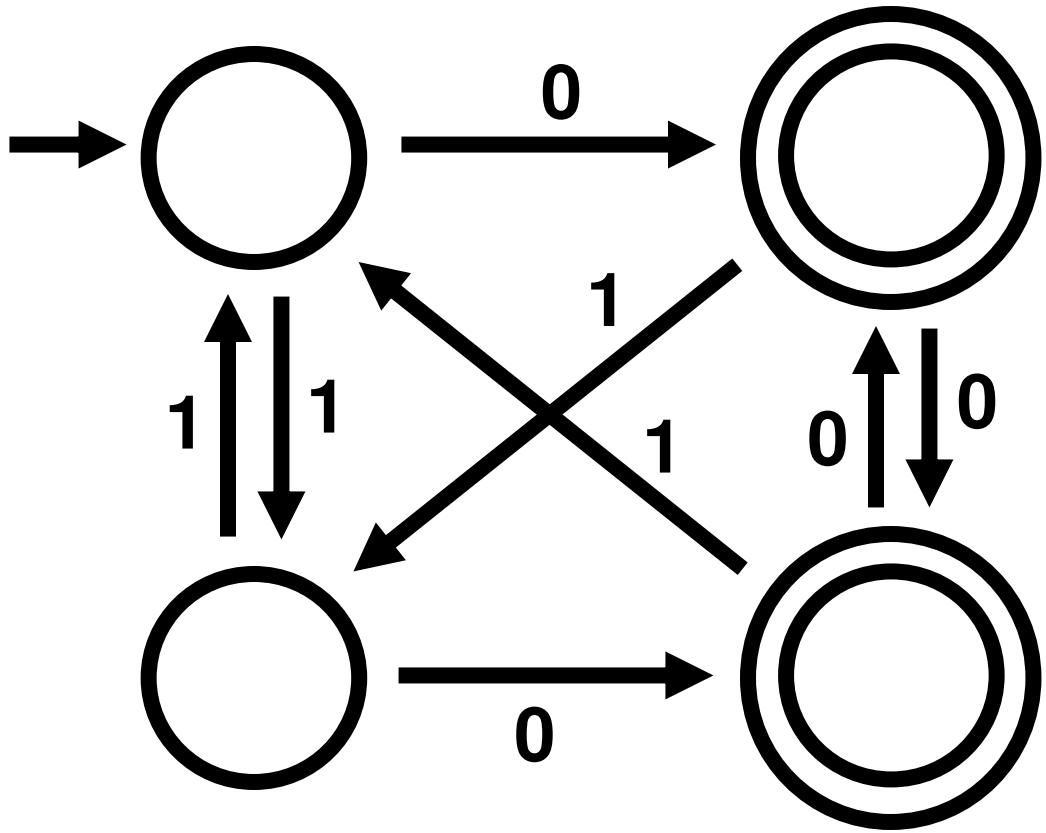

HOW ABOUT THIS?

YES

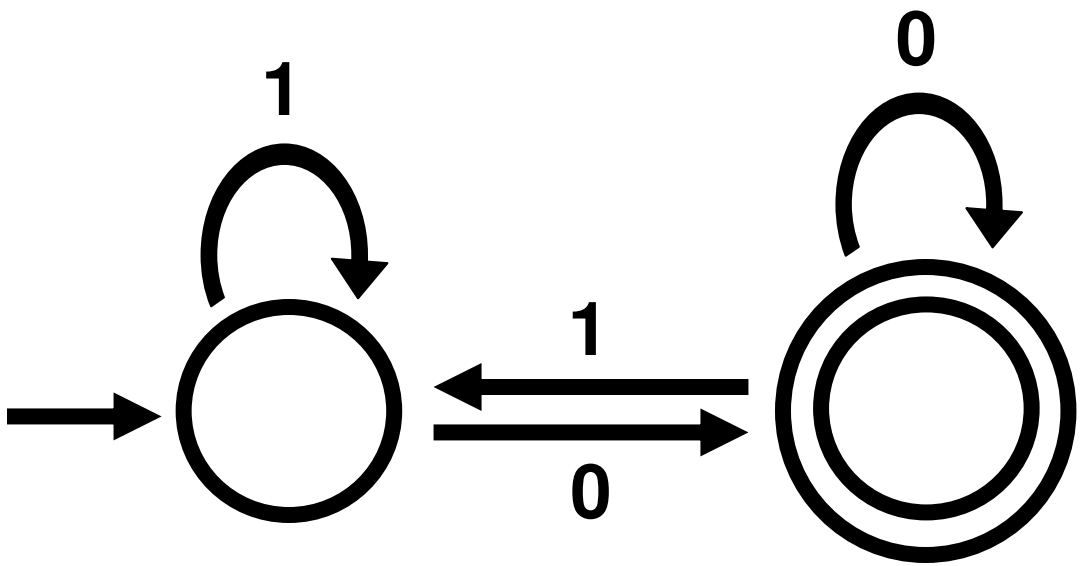

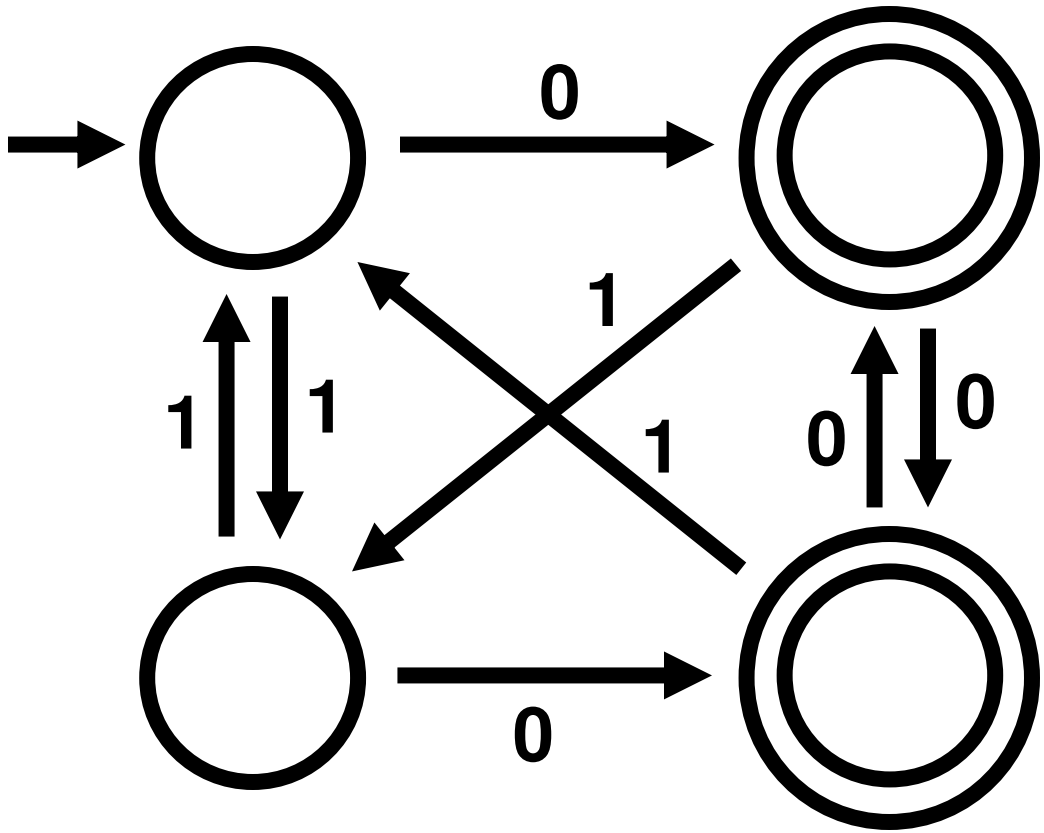

Equivalent DFAs

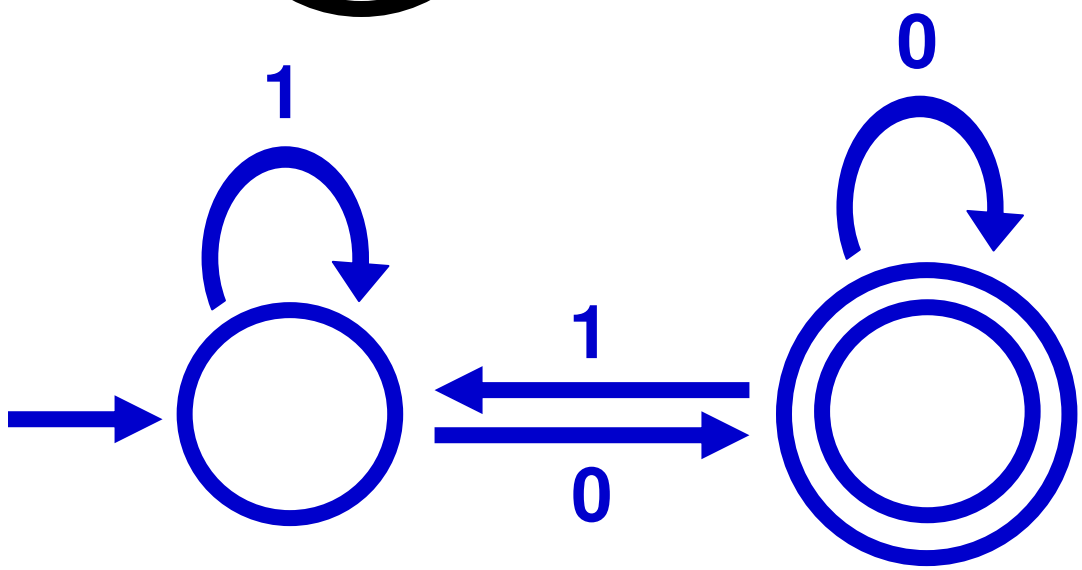

Main Result of this Lecture

For every regular language L,
there exists a unique, minimal DFA
that recognizes L

- uniqueness up to re-labeling of states

Words ←→ States

- Let DFA $M = (Q, \Sigma, \delta, q_0, F)$
- Each word w in Σ^* corresponds to a unique state in Q
  - The ending state of M on w
- Given $x, y \in \Sigma^*$
  - **$x \sim_M y$ iff**
    M ends in the same state on both x and y
  - $\sim_M$ is an equivalence relation (why?)
  - How many equivalence classes are there?

Example:
Is $1 \sim_M 11$? $10 \sim_M 00$?

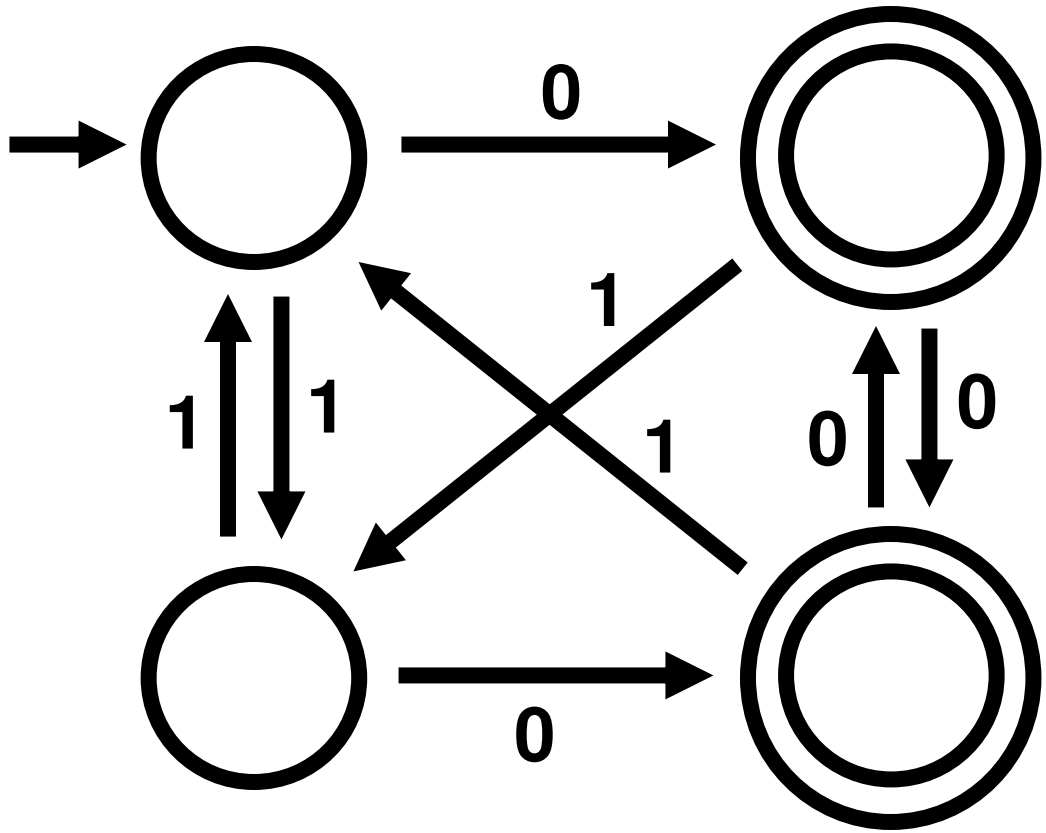

Indistinguishable Words/Strings

- Let DFA $M = (Q, \Sigma, \delta, q_0, F)$ recognize L
- Given $x, y \in \Sigma^*$
  - **$x \sim_L y$ (x and y are *indistinguishable*) iff $\forall z \in \Sigma^*$, $xz \in L$ iff $yz \in L$**

Compare with

- **$x \sim_M y$ iff M ends in the same state on both x and y**

Example:
What are indistinguishable words?

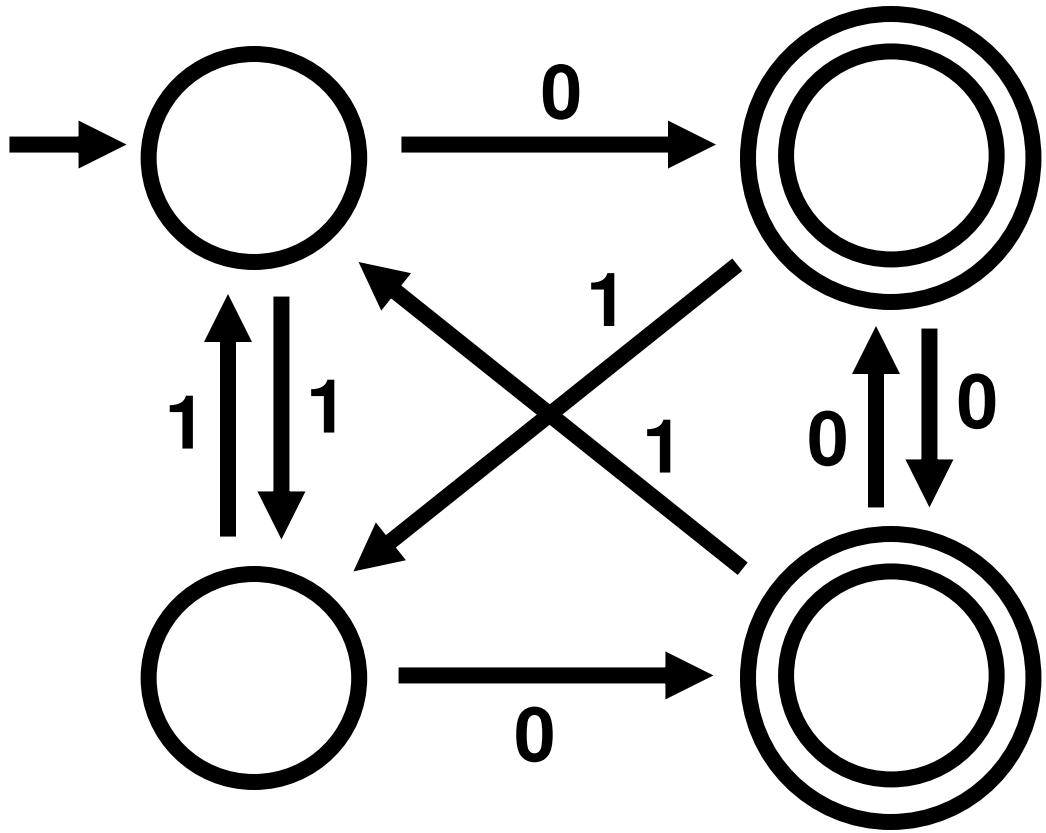

$\sim_L$ and $\sim_M$

- Let DFA $M = (Q, \Sigma, \delta, q_0, F)$ recognize L
- Given $x, y \in \Sigma^*$
  - **$x \sim_L y$ (x and y are *indistinguishable*) iff $\forall z \in \Sigma^*$, $xz \in L$ iff $yz \in L$**
  - **$x \sim_M y$ iff M ends in the same state on both x and y**
  - **True or False:**
    - If $x \sim_M y$ then $x \sim_L y$ TRUE
    - If $x \sim_L y$ then $x \sim_M y$ FALSE

Indistinguishable Words

- Let DFA $M = (Q, \Sigma, \delta, q_0, F)$ recognize L
- Given $x, y \in \Sigma^*$
  - **$x \sim_L y$ (x and y are *indistinguishable*) iff $\forall z \in \Sigma^*$, $xz \in L$ iff $yz \in L$**
  - **$x \sim_M y$ iff M ends in the same state on both x and y**

Which has more equivalence classes -- $\sim_M$ or $\sim_L$?

Myhill-Nerode Theorem (a version)

The relation $\sim_L$ **defines a DFA M_L** for language L where the states of M_L correspond to the equivalence classes of $\sim_L$

M_L is the unique, minimal DFA for L (up to isomorphism)

Proof of Myhill-Nerode Thm.

Next:
Algorithm for DFA Minimization

Indistinguishable States

- Idea: Merge "indistinguishable states"
- Recall:
  - States of DFA M map 1-1 to equivalence classes of $\sim_M$
  - Each equivalence class of $\sim_M$ is in some equivalence class of $\sim_L$
- States p and q are **indistinguishable** iff their corresponding $\sim_M$ equivalence classes are in the same class of $\sim_L$
  - We write $p \sim q$
  - $p \nsim q$ → "p and q are distinguishable"

The Algorithm We Want

Input: DFA M

Output: DFA M_L such that:

$$M \equiv M_L$$

M_L has no unreachable states

M_L is irreducible

$$\|$$

states of M_L are pairwise distinguishable

Theorem: M_L is the unique minimum

DFA Minimization Algo.: Idea

- States of M_L are equivalence classes of $\sim_L$
- Equivalence classes of $\sim_L$ can be obtained by **merging states of M**
- Our algorithm works in reverse:
  - Start by *assuming* all states as being merged together
  - Identify pairs of distinguishable states
    - Repeat until no new distinguishable state-pairs identified

TABLE-FILLING ALGORITHM

Input: DFA $M = (Q, \Sigma, \delta, q_0, F)$

Output: Table: $\{ (p,q) \mid p,q \in Q \text{ and } p \not\sim q \}$

States of $M_L = \{ [q] \mid q \in Q \}$

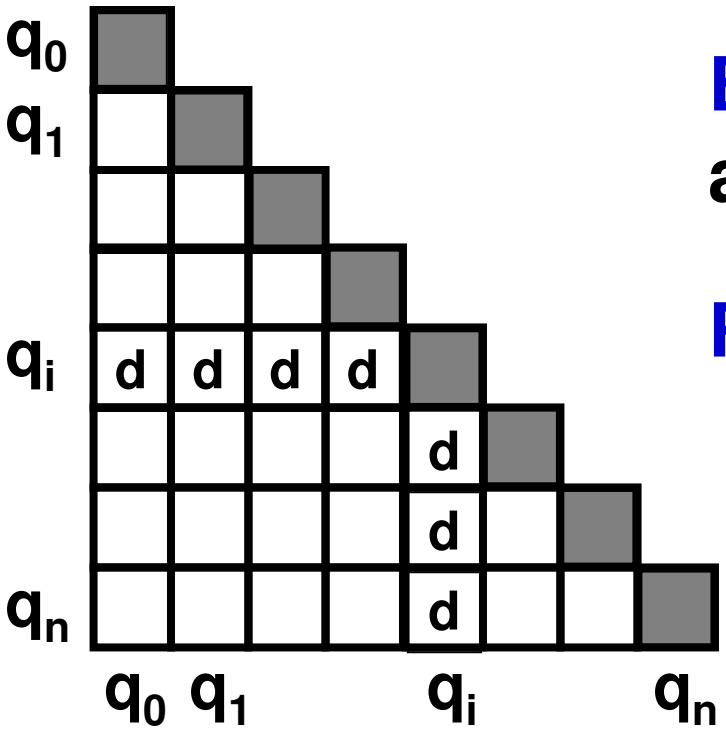

Base Case: **p accepts and q rejects $\Rightarrow p \not\sim q$**

Recursion:

$$\begin{array}{l} p \xrightarrow{\sigma} p' \\ \qquad\qquad \not\sim \\ q \xrightarrow{\sigma} q' \end{array} \Rightarrow p \not\sim q$$

Example

	q_0	q_1	q_2	q_3
q_0				
q_1	d			
q_2	d	d		
q_3	d	d	d	

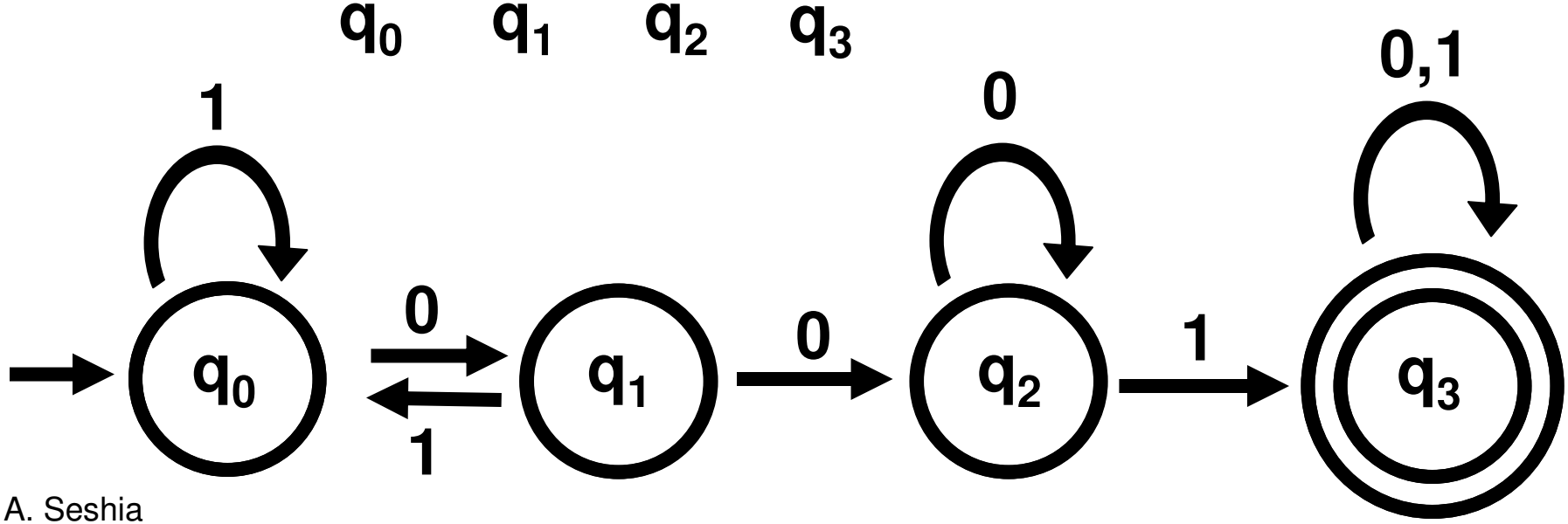

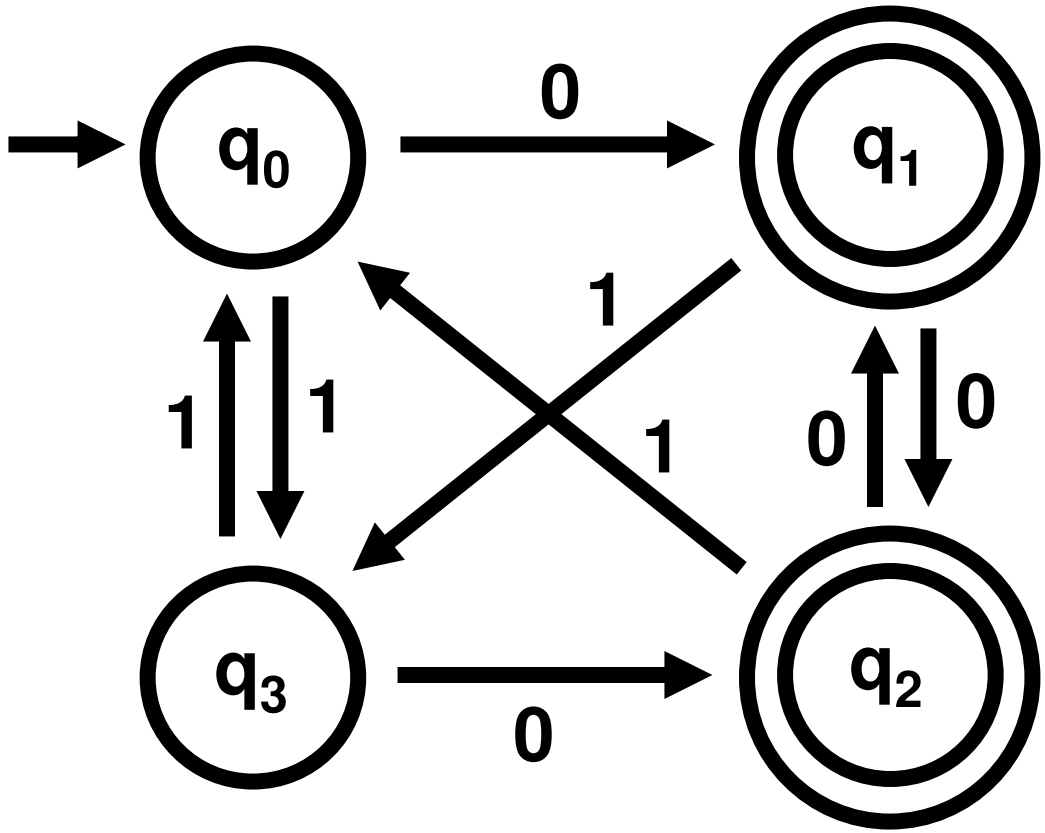

	q_0	q_1	q_2	q_3
q_0				
q_1	d			
q_2	d			
q_3		d	d	

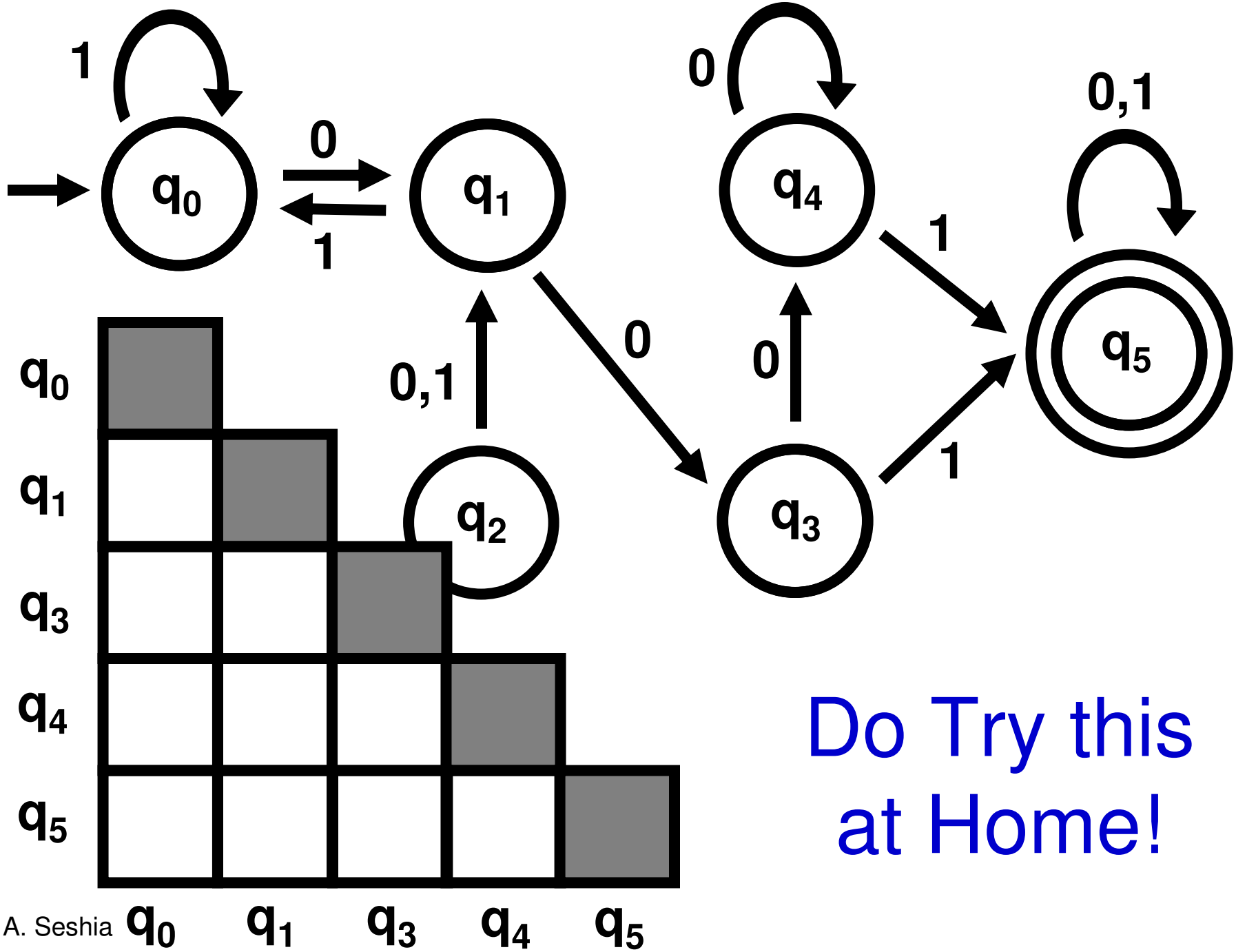

Do Try this at Home!

Correctness of Algorithm

1. If algorithm marks (p, q) as “d”, then $p \not\sim q$
2. If $p \not\sim q$, then algorithm marks (p, q) as “d”

Proving (1) is easy. Use induction on the step at which (p, q) was marked “d”.

Part (2):
If $p \not\sim q$, then the algorithm marks (p, q) as "d"

Proof (by contradiction):

Suppose $p \not\sim q$, but the algorithm does not mark (p, q) as "d"

Since $p \not\sim q$ there exists w such that:

$$\hat{\delta}(p, w) \in F \text{ and } \hat{\delta}(q, w) \notin F$$

Of all such "bad pairs" (p, q), let p, q be a pair with the smallest |w|

If $p \not\sim q$, then the algorithm marks (p, q) as "d"

Proof (by contradiction):

Suppose $p \not\sim q$, but the algorithm does not mark (p, q) as "d"

$$\hat{\delta}(p, w) \in F \text{ and } \hat{\delta}(q, w) \notin F$$

Of all such "bad pairs" (p, q), let p, q be a pair with the smallest |w|

$w = \sigma w'$, where $\sigma \in \Sigma$ (w is not ε, why?)

Let $p' = \delta(p,\sigma)$ and $q' = \delta(q,\sigma)$

Then (p', q') is also a bad pair Contradiction! (why?)

Complexity of Algorithm

- For DFA M, let
  - Number of states of M be n
  - Size of the input alphabet Σ be k
- Initialization of table: $O(n^2)$
- Rest of the algorithm: $O(k\ n^2)$

Minimal NFA is NOT Unique

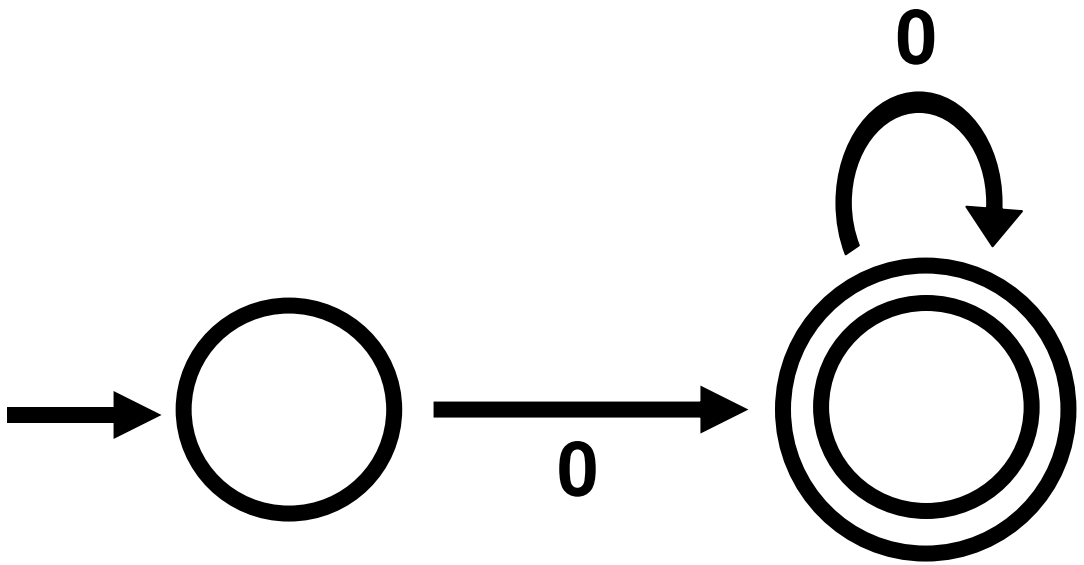

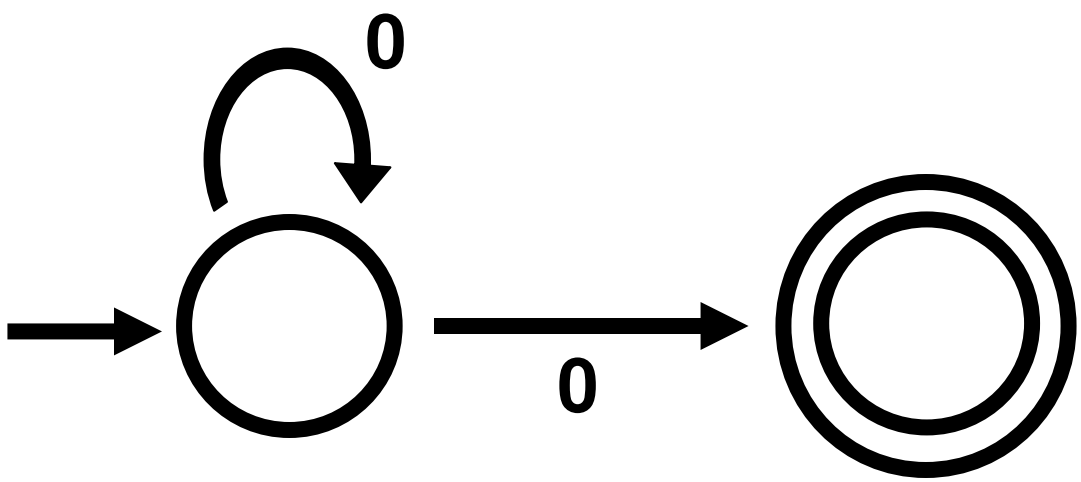

Next Steps

- Read Sipser 2.1 in preparation for next lecture